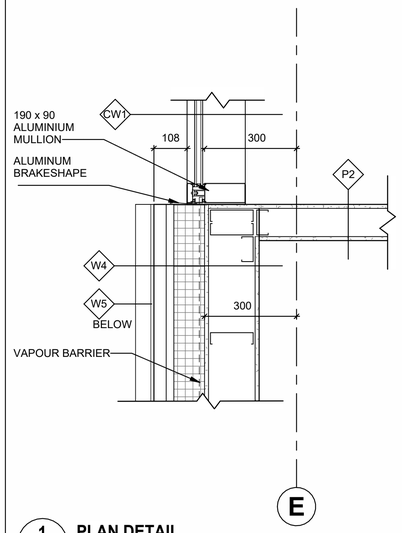

1 PLAN DETAIL
A2.1 SCALE = 1 : 10

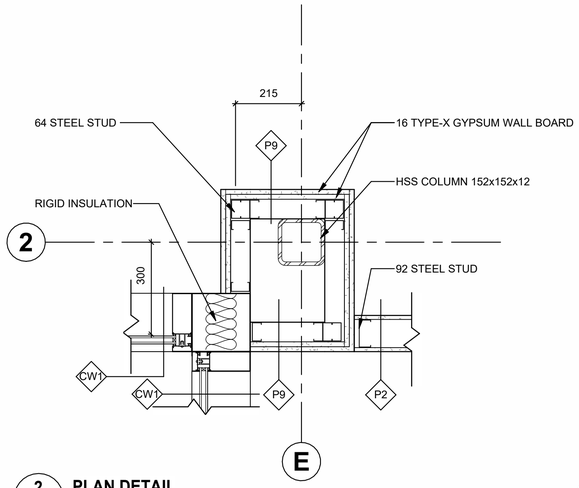

2 PLAN DETAIL
A2.1 SCALE = 1 : 10

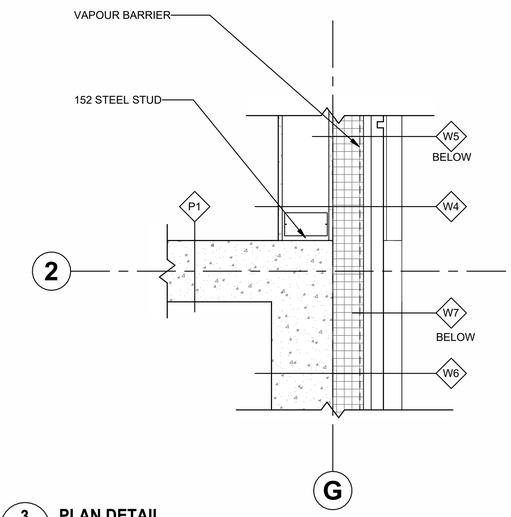

3 PLAN DETAIL
A2.1 SCALE = 1 : 10

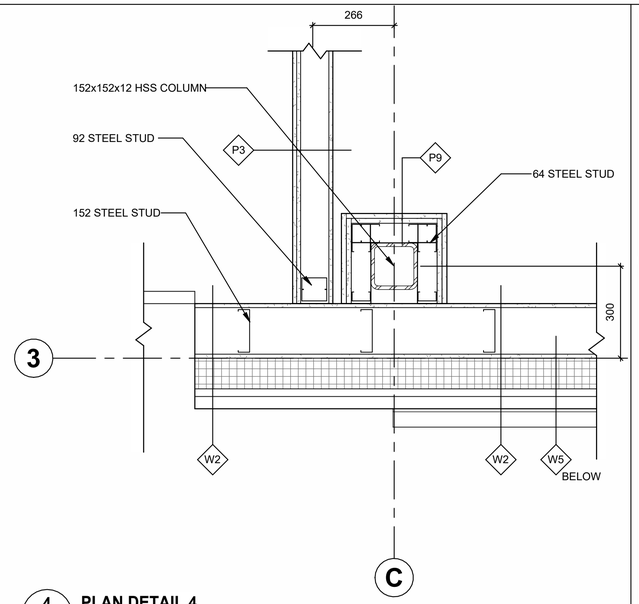

4 PLAN DETAIL 4
A2.1 SCALE = 1 : 10

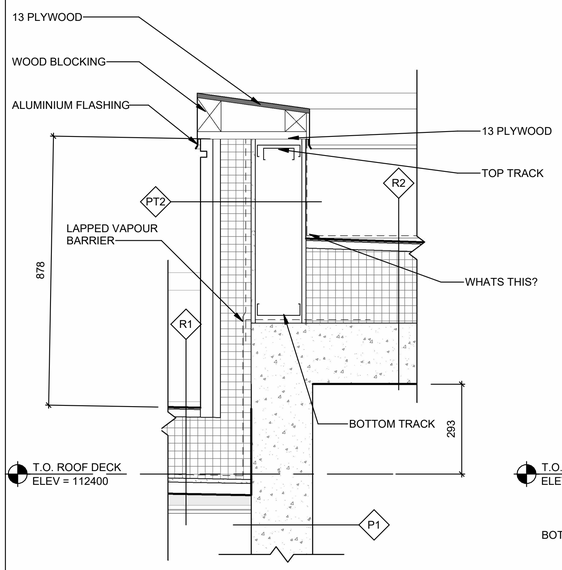

5 SECTION DETAIL
A3.3 SCALE = 1 : 10

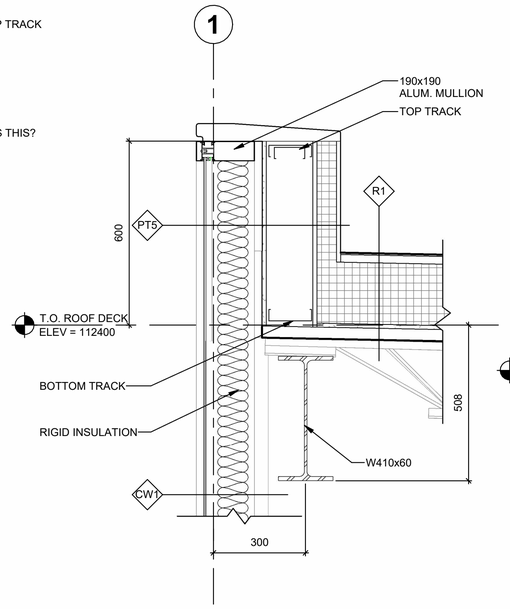

6 SECTION DETAIL
A4.1 SCALE = 1 : 10

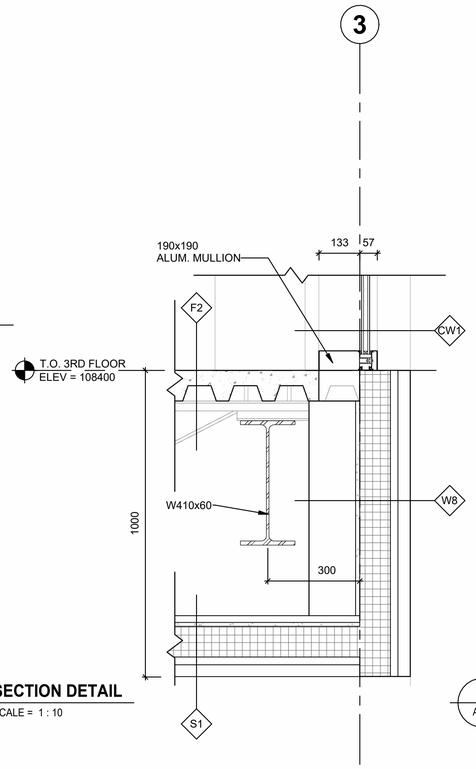

7 SECTION DETAIL
A4.2 SCALE = 1 : 10

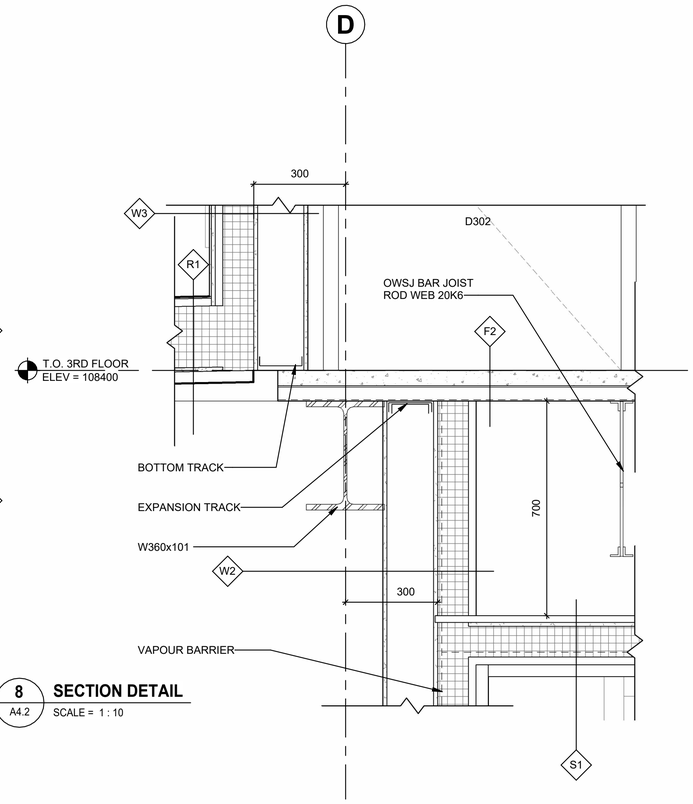

8 SECTION DETAIL
A4.2 SCALE = 1 : 10

NAIT

SCHOOL OF CONSTRUCTION AND
APPLIED BUILDING SCIENCE

ARCHITECTURAL TECHNOLOGY

No.	Description	Date

NAIT AMBULANCE HEADQUATERS

PLAN & SECTION DETAILS

Class Number	A03
Date	23/03/2026
Drawn by	CHIDERA UZO
Instructor	ANDRE LUCENA

A5.1

Scale 1 : 10

C:\SCHOOL\CDOC 2600 - Architectural Construction Documents\UZO-2600 CDOC AMBULANCE STATION.rvt